REVISIONS			
REV	DESCRIPTION	DATE	APPROVED
A	REVISED PER DCN 224	87-07-02	AF
B	REDRAWN WITH CHANGES (SEE REDLINES)	03/29/04	DR
C	SEE ECN 2202	15/03/31	SK
D	SEE ECN 2788	20/06/29	SK

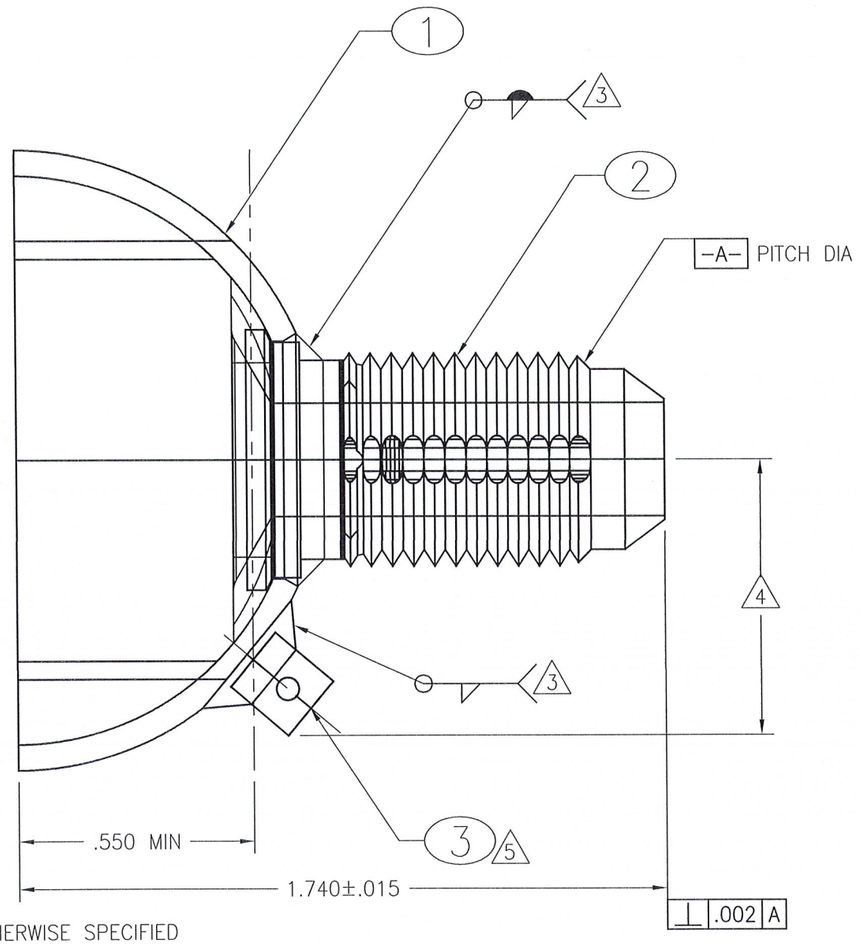

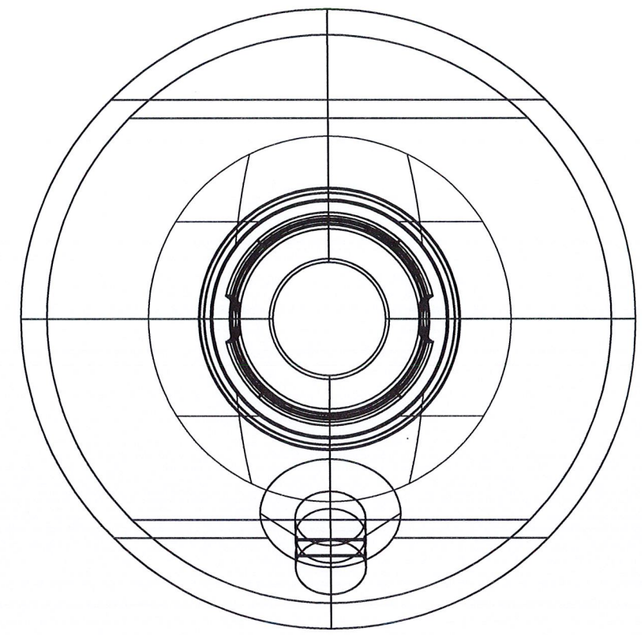

NOTES: UNLESS OTHERWISE SPECIFIED

1. INTERPRET DWG PER ASME Y-14.100
2. IDENTIFY LOT CONTROL PER MIL-STD-130
3. INERT GAS WELD AS NOTED AWS D17.1/D17.1
4. CANNOT EXCEED THE RADIUS OF THE SHELL
5. RADIAL LOCATION OF F/N 3 AND HOLE IN F/N 3 WITH RESPECT TO SLOT IN F/N 2 IS OPTIONAL
6. MAGNETIC PARTICLE INSPECT PER ASTM E1444 CONTINUOUS, WET, FLUORESCENT, CIRCULAR AND LONGITUDINAL METHOD. NO DEFECTS ALLOWED

ITEM NO.	QTY REQD	PART OR IDENTIFYING NO.	NOMENCLATURE OR DESCRIPTION	MATERIAL SPECIFICATION
3	1	10378	TAB, LOCKWIRE	
2	1	10379	FITTING	
1	1	10382	SHELL, CLOSURE	

PARTS LIST

THIS DOCUMENT IS THE PROPERTY OF THE APPLIED PRESSURE VESSELS AND CONTAINS CONFIDENTIAL AND PROPRIETARY INFORMATION, AND SHALL NOT BE COPIED OR REPRODUCED, IN WHOLE OR PART, DIVULGED OR USED FOR DESIGN OR MANUFACTURE WITHOUT SPECIFIC WRITTEN PERMISSION FROM THE APPLIED PRESSURE VESSELS. RECIPIENT, BY THE CUSTODY, USE OR RETENTION OF THIS DOCUMENT, AGREES TO THE FOREGOING AND AGREES TO MAINTAIN THE CONTENTS IN CONFIDENCE.

10385	272-9
NEXT ASSY	USED ON
APPLICATION	

UNLESS OTHERWISE SPECIFIED DIMENSIONS ARE IN INCHES
TOLERANCES ARE:
FRACTIONS ±1/16 | DECIMALS .X=±.1 .XX=±.03 .XXX=±.010 | ANGLES ±0.30°

MATERIAL

FINISH

DO NOT SCALE DWG

CONTRACT NO.

APPROVALS		DATE
DRAWN	VLADIMIR V.	03/29/04
CHECKED		
ISSUED		
Q.A.		

APPLIED PRESSURE VESSELS

TITLE: CAP ASSEMBLY

SIZE	FSCM NO.	DWG. NO.	REV.
C	72QQ7	10588	D

SCALE NTS | JOB NO. 6986 | SHEET 1 OF 1