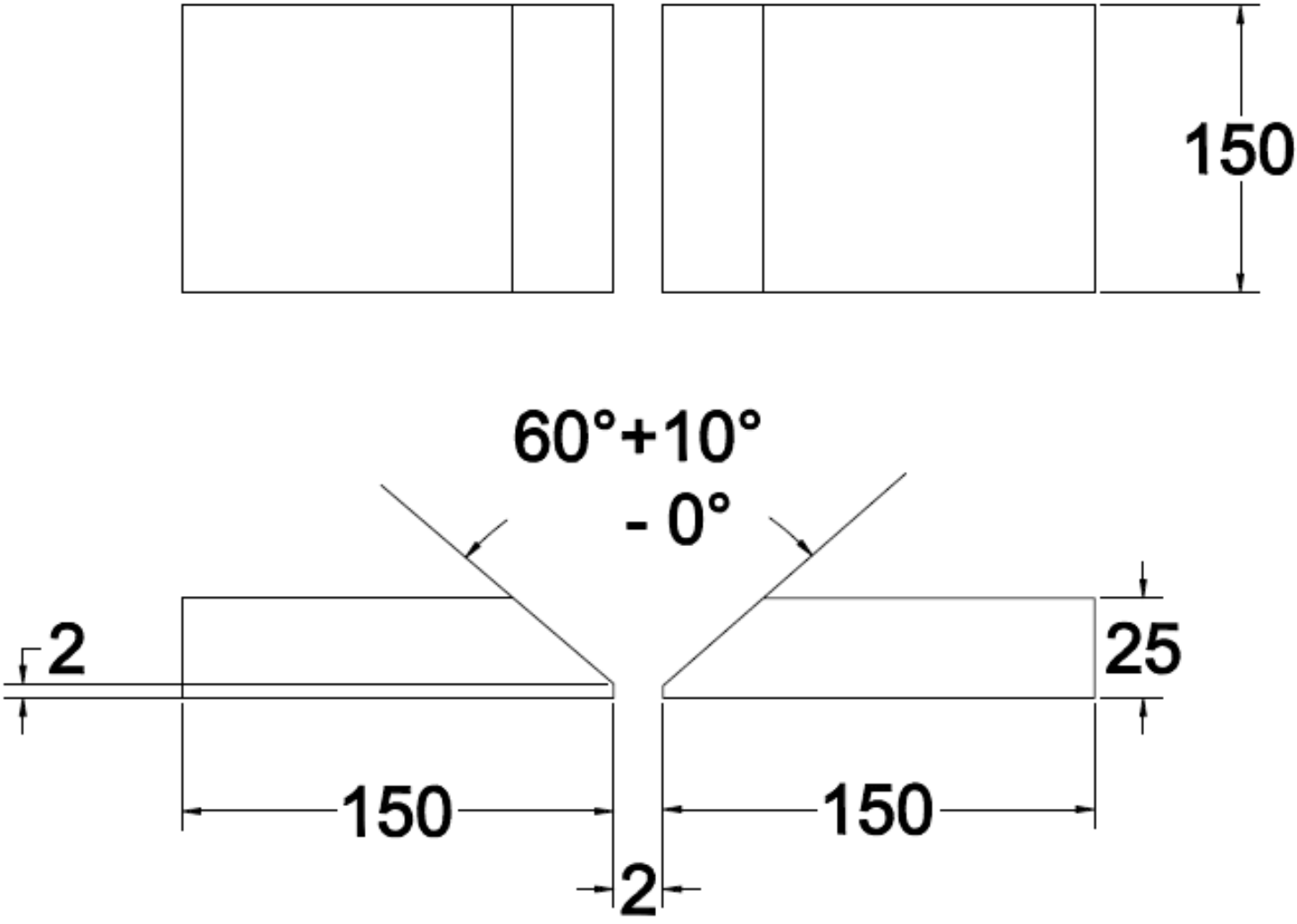
150
60°+10°
- 0°
2
25
150
150
2